LCD Programming

16X2 LCD

- capable of displaying 2 lines each having 16 Characters

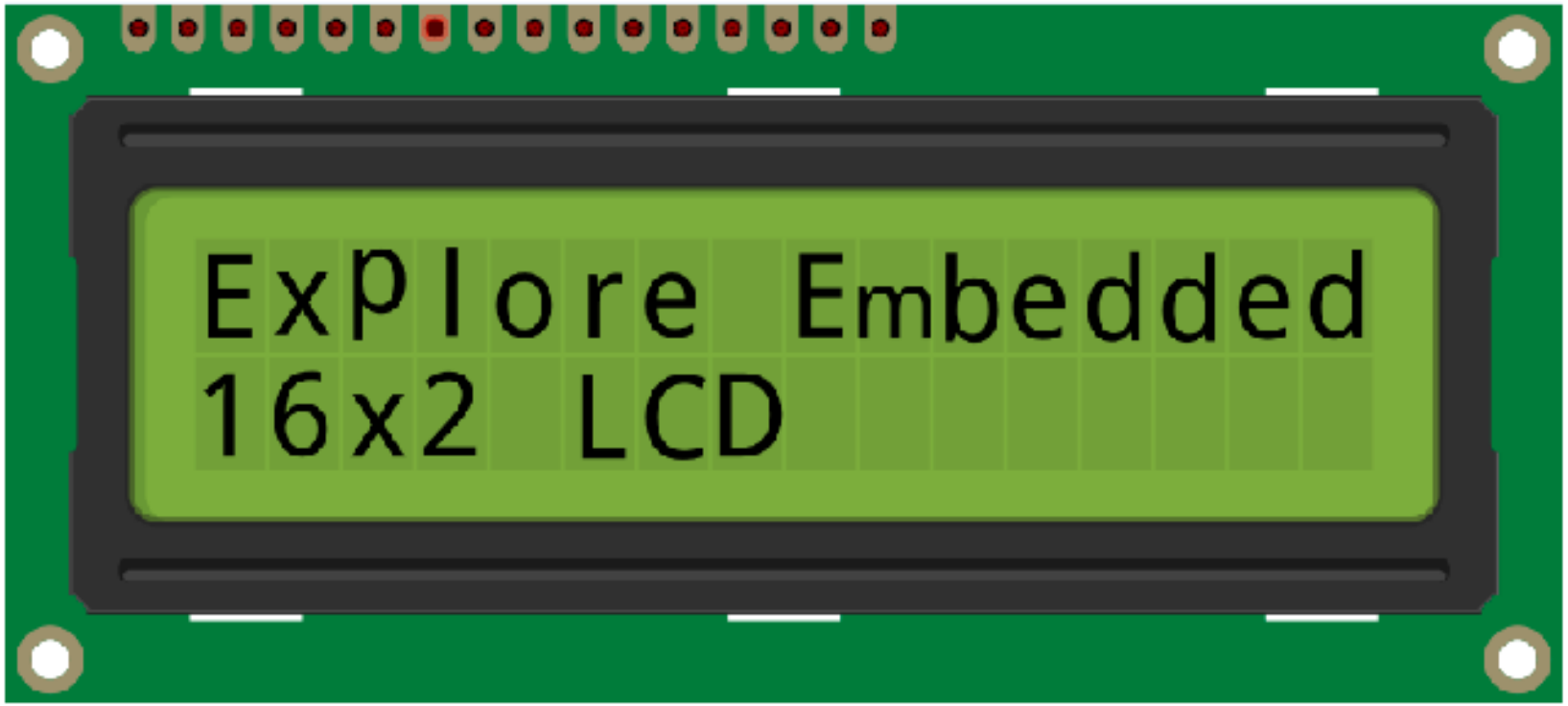

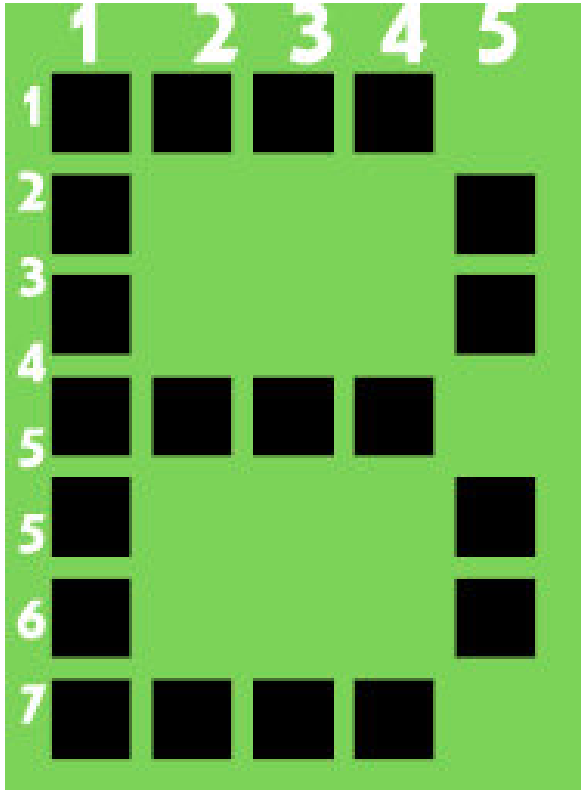

- It has two types of input lines: data line and control lines
- 8 data lines, 3 control lines: Register select, Read/Write and Enable.
- In the kit that we are using, Read/ write is grounded-> used for write.

Data Bus: 8-bit data bus referenced as D0-D7. As it is a 8-bit data bus, we can send the data/cmd to LCD in bytes. It also provides the provision to send the data/cmd in chunks of 4-bit, which is used when there are limited number of GPIO lines on the microcontroller. Accordingly two modes of operation: 8 bit mode and 4 bit mode

- The kit that we are using is in 4 bit mode. Data lines D7-D4 are used

Register Select(RS): The LCD has two registers namely a Data register and Command register. Any data that needs to be displayed on the LCD has to be written to the data register of LCD. Command can be issued to LCD by writing it to Command register of LCD. This signal is used to differentiate the data/cmd received by the LCD.

If the RS signal is **LOW** then the LCD interprets the 8-bit info as **Command** and writes it to **Command register** and performs the action as per the command.

If the RS signal is **HIGH** then the LCD interprets the 8-bit info as **data** and copies it to **data register**. After that the LCD decodes the data for generating the 5x7 pattern and finally displays on the LCD.

On a character lcd a character is generated in a matrix of 5×8 or 5×7. Where 5 represents number of columns and 7/8 represent number of rows. Maximum size of the matrix is 5×8. You can not display character greater then 5×8 dimension matrix. Normally we display a character in 5×7 matrix and left the 8th row for the cursor. If we use the 8th row of the matrix for the character display, then there will be no room for cursor.

Read/Write(RW): This signal is used to write the data/cmd to LCD and read the busy flag of LCD. For write operation the RW should be **LOW** and for read operation the R/W should be **HIGH**.

- In the kit we cant read as it is grounded

Enable(EN): This pin is used to send the enable trigger to LCD. After sending the data/cmd, A HIGH-to-LOW pulse has to be send on this enable pin which will latch the info into the LCD register and triggers the LCD to act accordingly.

LCD display takes a time of 39-43µS to place a character or execute a command. Except for clearing display and to seek cursor to home position it takes 1.53ms to 1.64ms. Any attempt to send any data before this interval may lead to failure to read data or execution of the current data. So we have to give appropriate delay after each command.

Schematic

Below schematic shows the minimum connection required for interfacing the LCD with the microcontroller. As we are interfacing the LCD in 4-bit mode, only the higher 4 data lines are used as data bus.

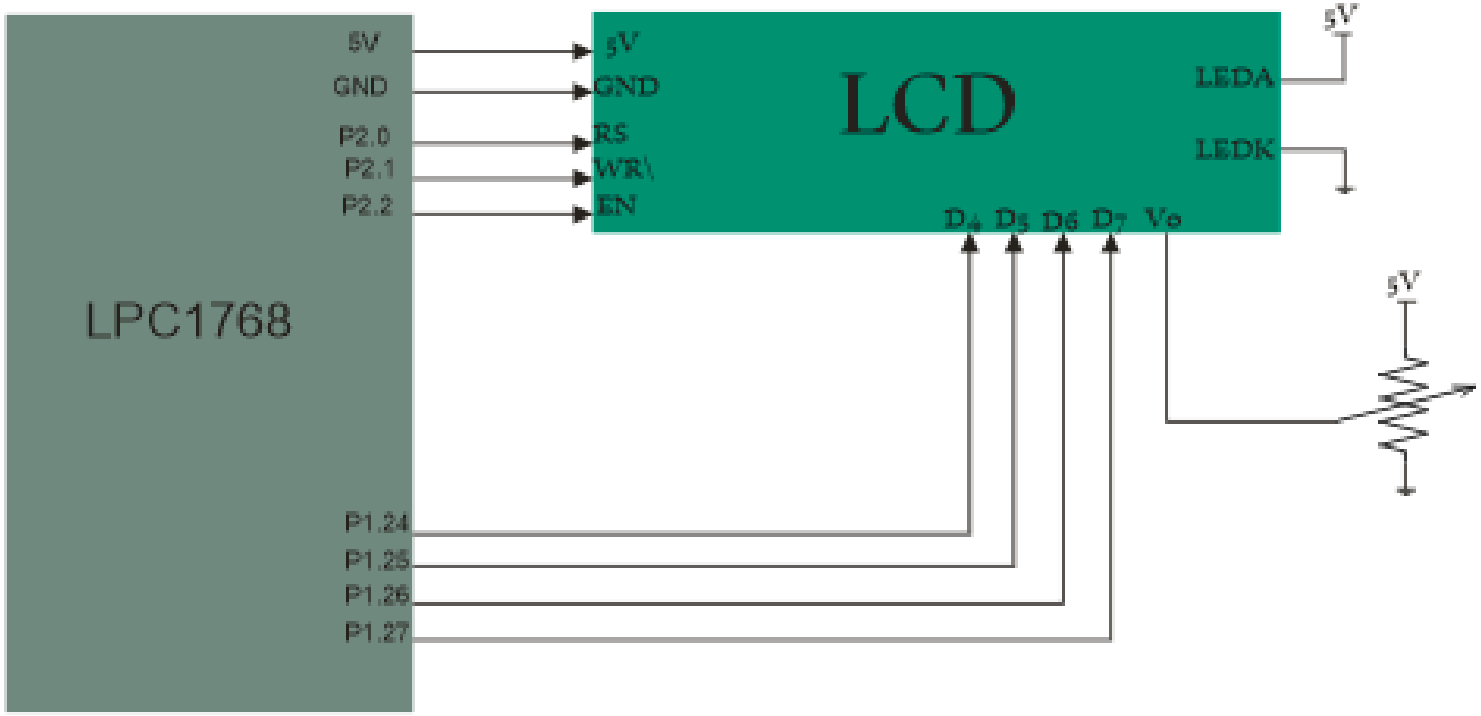

Note: The pin nos in the diagram are different with respect to the kit that we use in lab.

LCD Initialization

Before displaying characters on the LCD display, it must be configured first. To configure an LCD display, four command words must be sent to LCD. The commands are:

1. Function set
2. Display On/Off control
3. Entry mode set
4. Display Clear

- Our kit works in 4 bit mode.
- To send data in 4bit mode; first put upper 4bit in the 4 bit data bus connected to 4MSB pins of LCD display, then put control signals in the control bus, then pulse the E pin once. Next put the lower 4 bit in the data bus and pulse the E pin again.

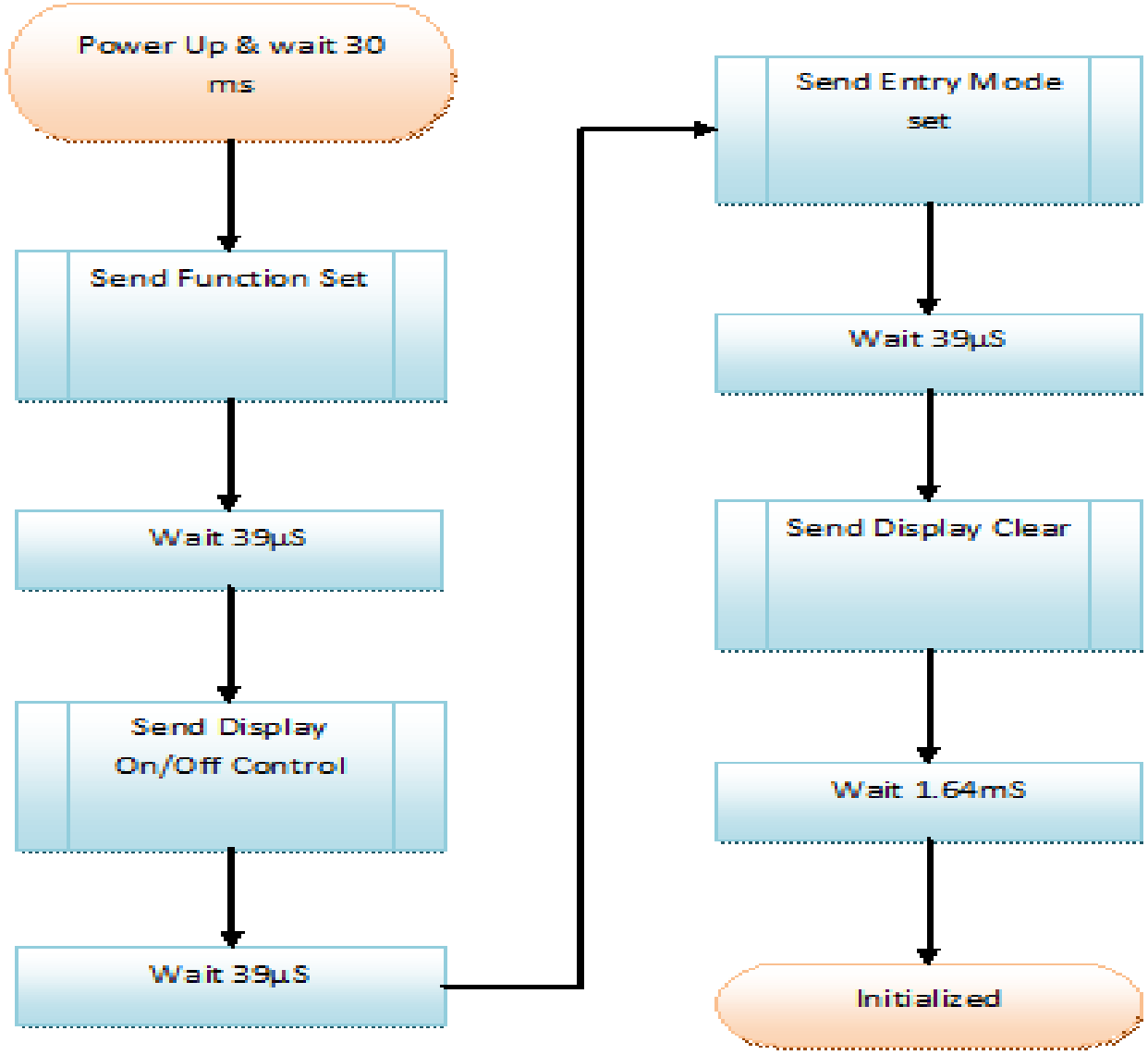

LCD Initialization Flow Chart

Before function set, we need to configure in 4 bit mode

Instruction	Code										Description	Execution time**
	RS	R/W	DB7	DB6	DB5	DB4	DB3	DB2	DB1	DB0		
Clear display	0	0	0	0	0	0	0	0	0	1	Clears display and returns cursor to the home position (address 0).	1.64mS
Cursor home	0	0	0	0	0	0	0	0	1	*	Returns cursor to home position (address 0). Also returns display being shifted to the original position. DDRAM contents remains unchanged.	1.64mS
Entry mode set	0	0	0	0	0	0	0	1	I/D	S	Sets cursor move direction (I/D), specifies to shift the display (S). These operations are performed during data read/write.	40uS
Display On/Off control	0	0	0	0	0	0	1	D	C	B	Sets On/Off of all display (D), cursor On/Off (C) and blink of cursor position character (B).	40uS
Cursor/display shift	0	0	0	0	0	1	S/C	R/L	*	*	Sets cursor-move or display-shift (S/C), shift direction (R/L). DDRAM contents remains unchanged.	40uS
Function set	0	0	0	0	1	DL	N	F	*	*	Sets interface data length (DL), number of display line (N) and character font(F).	40uS

Bit names

Bit	Settings	
I/D	0 = Decrement cursor position	1 = Increment cursor position
S	0 = No display shift	1 = Display shift
D	0 = Display off	1 = Display on
C	0 = Cursor off	1 = Cursor on
B	0 = Cursor blink off	1 = Cursor blink on
S/C	0 = Move cursor	1 = Shift display
R/L	0 = Shift left	1 = Shift right
DL	0 = 4-bit interface	1 = 8-bit interface
N	0 = 1/8 or 1/11 Duty (1 line)	1 = 1/16 Duty (2 lines)
F	0 = 5x7 dots	1 = 5x10 dots
BF	0 = Can accept instruction	1 = Internal operation in progress

Control and display commands

Sr.No.	Hex Code	Command to LCD instruction Register
1	01	Clear display screen
2	02	Return home
3	04	Decrement cursor (shift cursor to left)
4	06	Increment cursor (shift cursor to right)
5	05	Shift display right
6	07	Shift display left

Sr.No.	Hex Code	Command to LCD instruction Register
7	08	Display off, cursor off
8	0A	Display off, cursor on
9	0C	Display on, cursor off
10	0E	Display on, character at cursor position not blinking
11	0F	Display on, character at cursor position blinking
12	10	Shift cursor position to left

Sr.No.	Hex Code	Command to LCD instruction Register
13	14	Shift cursor position to right
14	18	Shift the entire display to the left
15	1C	Shift the entire display to the right
16	80	Force cursor to beginning (1st line)
17	C0	Force cursor to beginning (2nd line)

So we send 0x33 as the command code. This will do the initial 8 bit mode starting of LCD. Now after this we need to send 0x32.

LCD Interfacing (Video)
https://www.youtube.com/watch?v=WocACC9xZbI

Websites for LCD:
https://mil.ufl.edu/3744/docs/lcdmanual/commands.html
https://msoe.us/taylor/tutorial/ce2800/lcddisplay
https://www.exploreembedded.com/wiki/LPC1768:_Lcd_4bit
https://www.elprocus.com/lcd-16x2-pin-configuration-and-its-working/
https://openlabpro.com/guide/16x2-character-lcd-interfacing-using-lpc1768/

4 x 4 KEY MATRIX

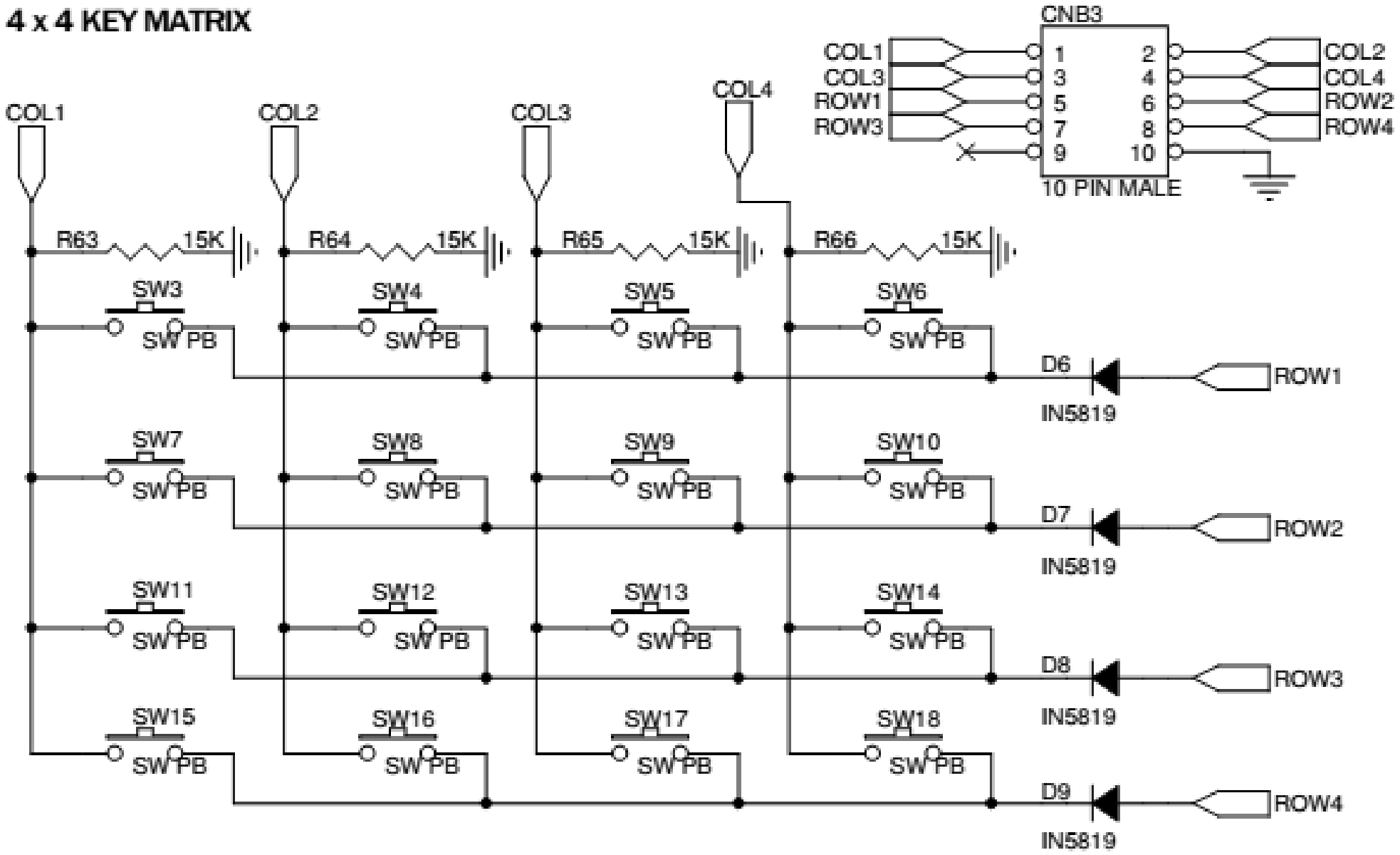

C1 to C4 -> P1.23 to P1.26. R1 to R4 -> P2.10 to P2.13

The switches SW3 to SW18 are organized as 4 rows X 4 columns matrix. One end of all the switches are configured as columns. The other end of the matrix configured as rows. A row line will be always an output from the controller. Column lines are pulled to ground. A high level sent from the row will appear at column end if the switch is pressed.